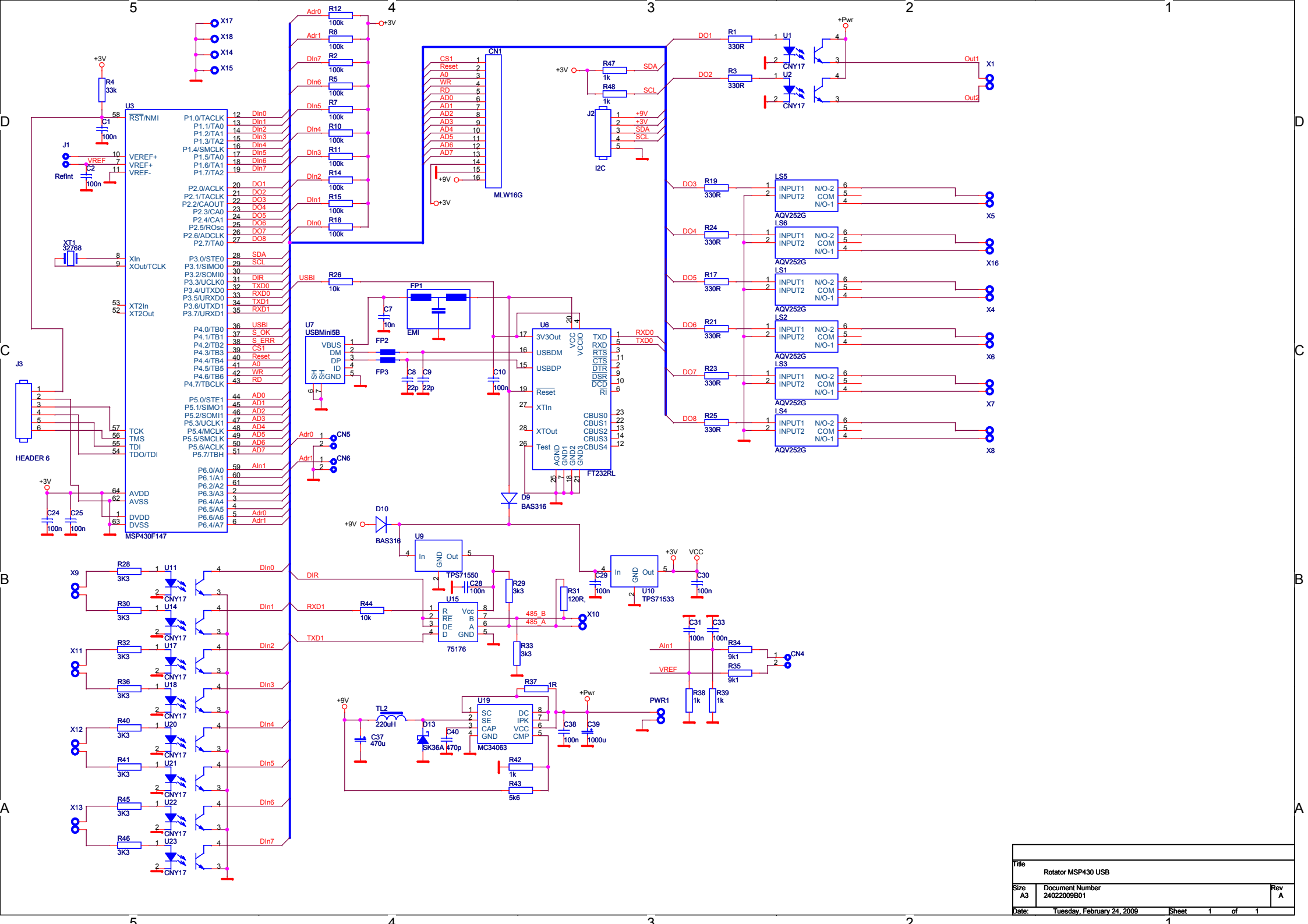
U3
MSP430F147
RST/NMI
P1.0/TACLK
P1.1/TA0
P1.2/TA1
P1.3/TA2
P1.4/SMCLK
P1.5/TA0
P1.6/TA1
P1.7/TA2
P2.0/ACLK
P2.1/TACLK
P2.2/CAOUT
P2.3/CA0
P2.4/CA1
P2.5/ROsc
P2.6/ADCLK
P2.7/TA0
P3.0/STE0
P3.1/SIMO0
P3.2/SOMI0
P3.3/UCLK0
P3.4/UTXD0
P3.5/URXD0
P3.6/UTXD1
P3.7/URXD1
P4.0/TB0
P4.1/TB1
P4.2/TB2
P4.3/TB3
P4.4/TB4
P4.5/TB5
P4.6/TB6
P4.7/TBCLK
P5.0/STE1
P5.1/SIMO1
P5.2/SOMI1
P5.3/UCLK1
P5.4/MCLK
P5.5/SMCLK
P5.6/ACLK
P5.7/TBH
P6.0/A0
P6.1/A1
P6.2/A2
P6.3/A3
P6.4/A4
P6.5/A5
P6.6/A6
P6.4/A7
VEREF+
VREF+
VREF-
XIn
XOut/TCLK
XT2In
XT2Out
TCK
TMS
TDI
TDO/TDI
AVDD
AVSS
DVDD
DVSS
CN1
MLW16G
CS1
Reset
A0
WR
RD
AD0
AD1
AD2
AD3
AD4
AD5
AD6
AD7
U6
FT232RL
3V3Out
USBDM
USBDP
Reset
XTIn
XTOut
Test
TXD
RXD
RTS
CTS
DTR
DSR
DCD
RI
CBUS0
CBUS1
CBUS2
CBUS3
CBUS4
U7
USBMini5B
VBUS
DM
DP
ID
GND
U1
U2
CNY17
LS1
LS2
LS3
LS4
LS5
LS6
AQV252G
INPUT1
INPUT2
N/O-2
COM
N/O-1
U9
TPS71550
U10
TPS71533
U15
75176
U19
MC34063
SC
SE
CAP
GND
DC
IPK
VCC
CMP
J1
J2
I2C
J3
HEADER 6
X1
X4
X5
X6
X7
X8
X9
X10
X11
X12
X13
X16
X17
X18
X14
X15
CN4
CN5
CN6
PWR1
+3V
+9V
+Pwr
VCC
VREF
AIn1
485_B
485_A
RxD0
TxD0
DO1
DO2
DO3
DO4
DO5
DO6
DO7
DO8
Out1
Out2
SDA
SCL
USBI
DIR
RXD1
TXD1
Adr0
Adr1
DIn0
DIn1
DIn2
DIn3
DIn4
DIn5
DIn6
DIn7
RefInt
XT1
32768
FP1
FP2
FP3
EMI
D9
BAS316
D10
BAS316
D13
SK36A
TL2
220uH
C37
470u
C40
470p
C38
100n
C39
1000u
R37
1R
R42
1k
R43
5k6
R29
3k3
R33
3k3
R31
120R,
R44
10k
R26
10k
R47
1k
R48
1k
R4
33k
C1
100n
C2
100n
C7
10n
C8
22p
C9
22p
C10
100n
C24
100n
C25
100n
C28
100n
C29
100n
C30
100n
C31
100n
C33
100n
R34
9k1
R35
9k1
R38
1k
R39
1k
R1
330R
R3
330R
R19
330R
R24
330R
R17
330R
R21
330R
R23
330R
R25
330R
R12
100k
R8
100k
R2
100k
R5
100k
R7
100k
R10
100k
R11
100k
R14
100k
R15
100k
R18
100k
R28
3K3
R30
3K3
R32
3K3
R36
3K3
R40
3K3
R41
3K3
R45
3K3
R46
3K3
Title
Rotator MSP430 USB
Size
A3
Document Number
24022009B01
Rev
A
Date:
Tuesday, February 24, 2009
Sheet
1
of
1